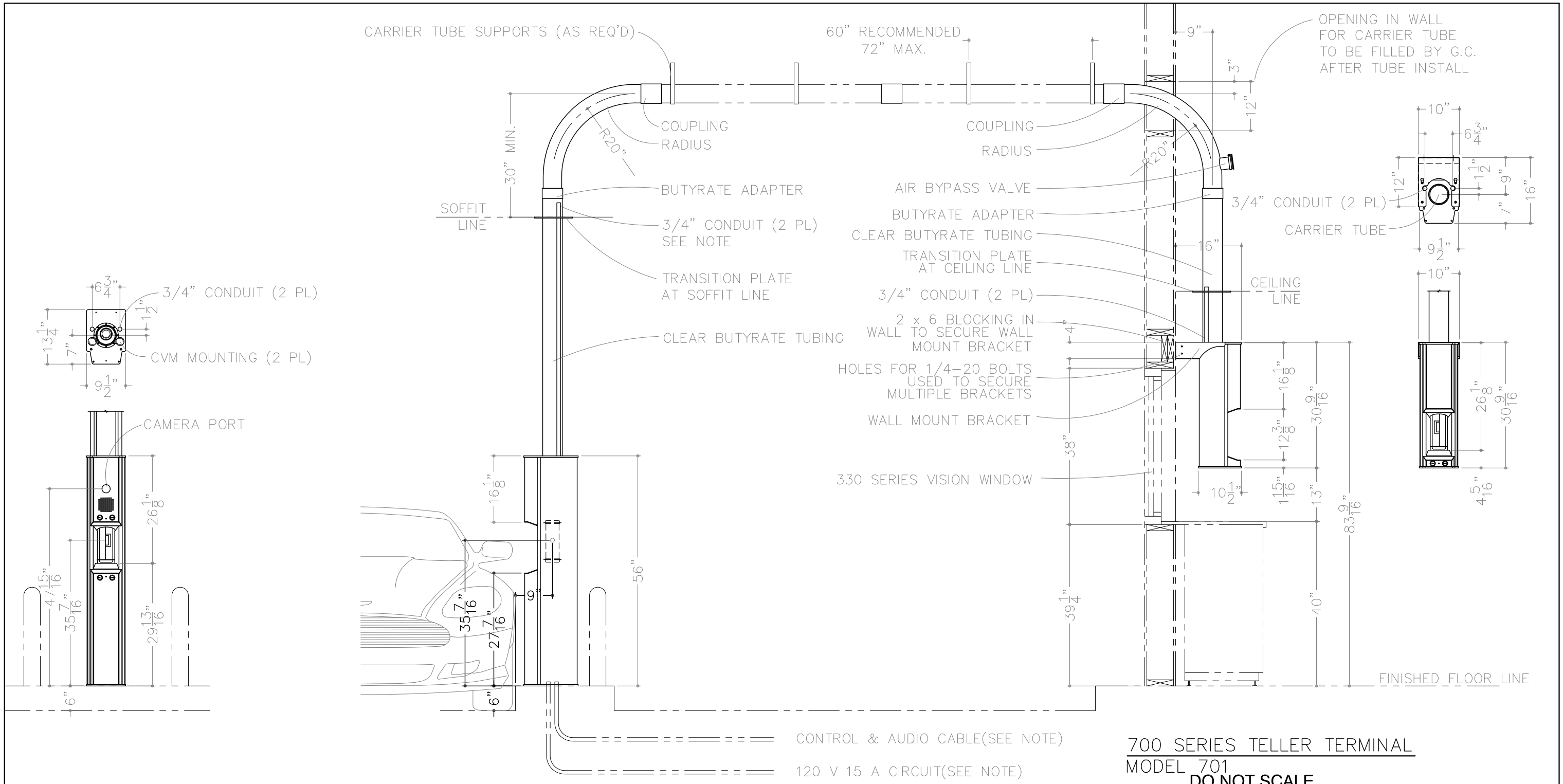

700 SERIES TELLER TERMINAL
MODEL 701

DO NOT SCALE

700 SERIES CUSTOMER TERMINAL
MODEL 702

NOTE:
1. CUSTOMER TERMINAL WILL RECEIVE OVERHEAD OR UNDERGROUND CONDUIT. IT IS THE RESPONSIBILITY OF THE OWNER/ARCHITECT/GC TO COORDINATE.
2. SYSTEM IS AVAILABLE FOR USE WITH PVC OR STEEL TUBING. REQUEST MODEL 700-00 FOR PVC OR MODEL 700-01 FOR STEEL.

UL LISTED

American Vault® Waco, Texas

PRODUCT APPLICATION DRAWING
700 SERIES REMOTE TRANSACTION SYSTEM
MODEL 700-00 PVC MODEL 700-01 STEEL

SIZE	DWG NO	DATE	SHEET
B	20089	01.10.09	1 OF 2

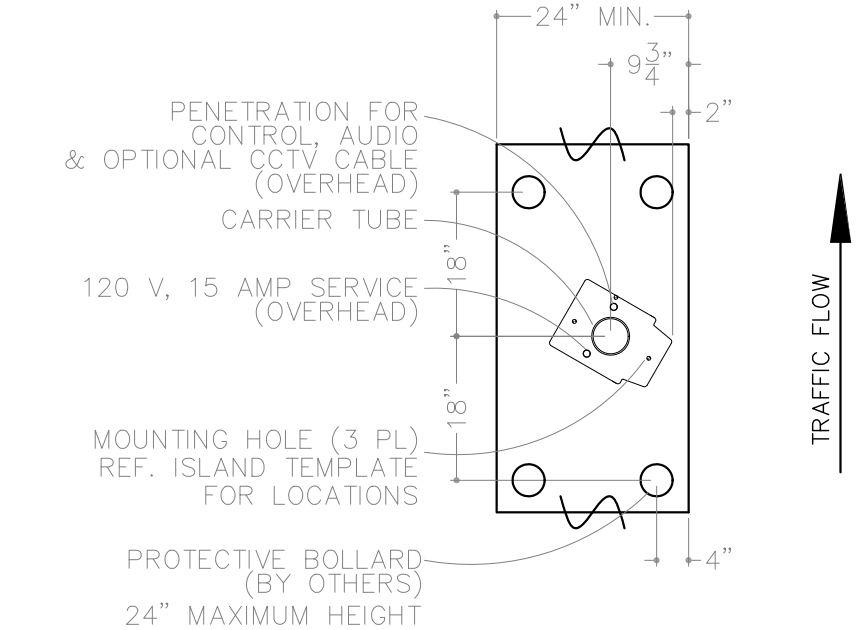

ISLAND DETAIL

(OVERHEAD CONDUIT INSTALLATION)

NOTE: ISLAND IS TO BE SMOOTH AND LEVEL

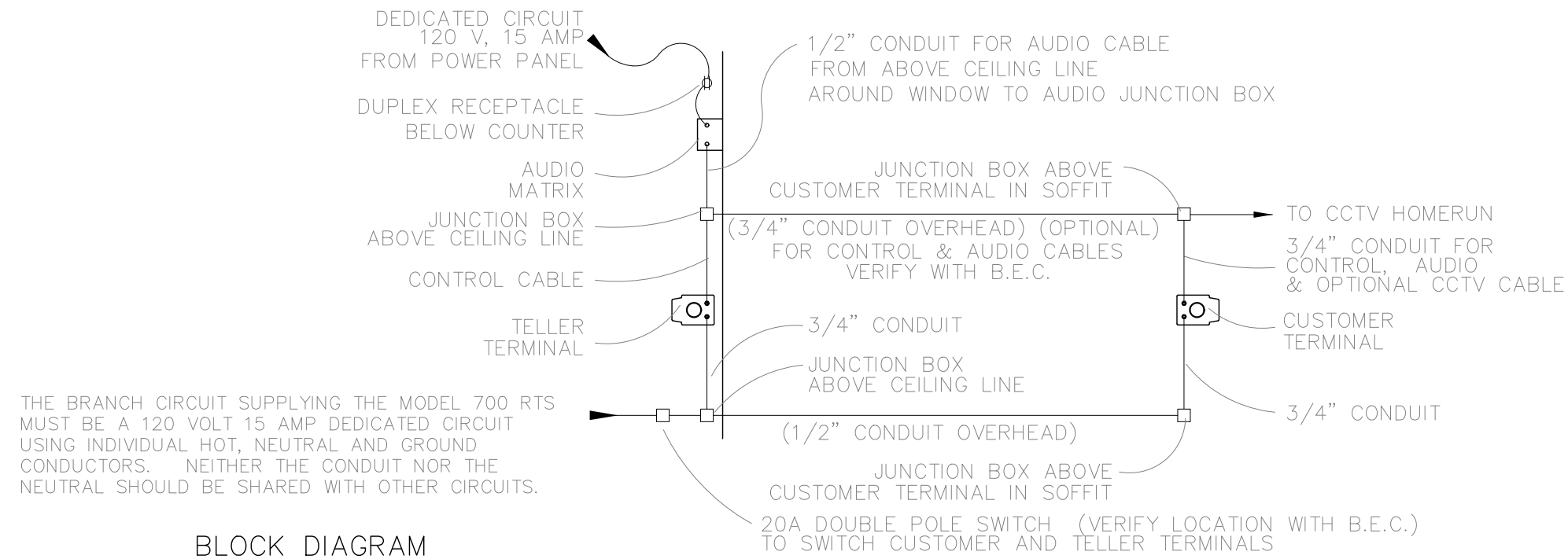

THE BRANCH CIRCUIT SUPPLYING THE MODEL 700 RTS MUST BE A 120 VOLT 15 AMP DEDICATED CIRCUIT USING INDIVIDUAL HOT, NEUTRAL AND GROUND CONDUCTORS. NEITHER THE CONDUIT NOR THE NEUTRAL SHOULD BE SHARED WITH OTHER CIRCUITS.

BLOCK DIAGRAM

(OVERHEAD CONDUIT INSTALLATION)

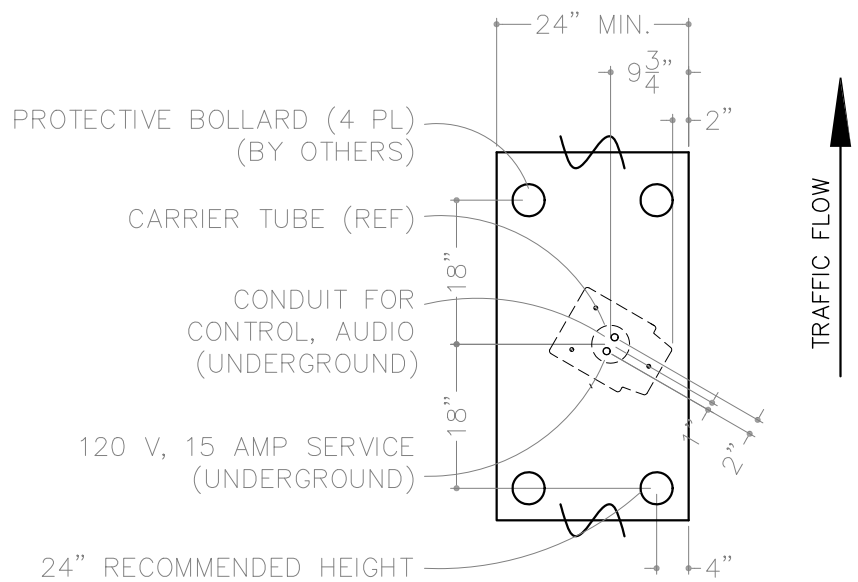

ISLAND DETAIL

(UNDERGROUND CONDUIT INSTALLATION)

NOTE: ISLAND IS TO BE SMOOTH AND LEVEL

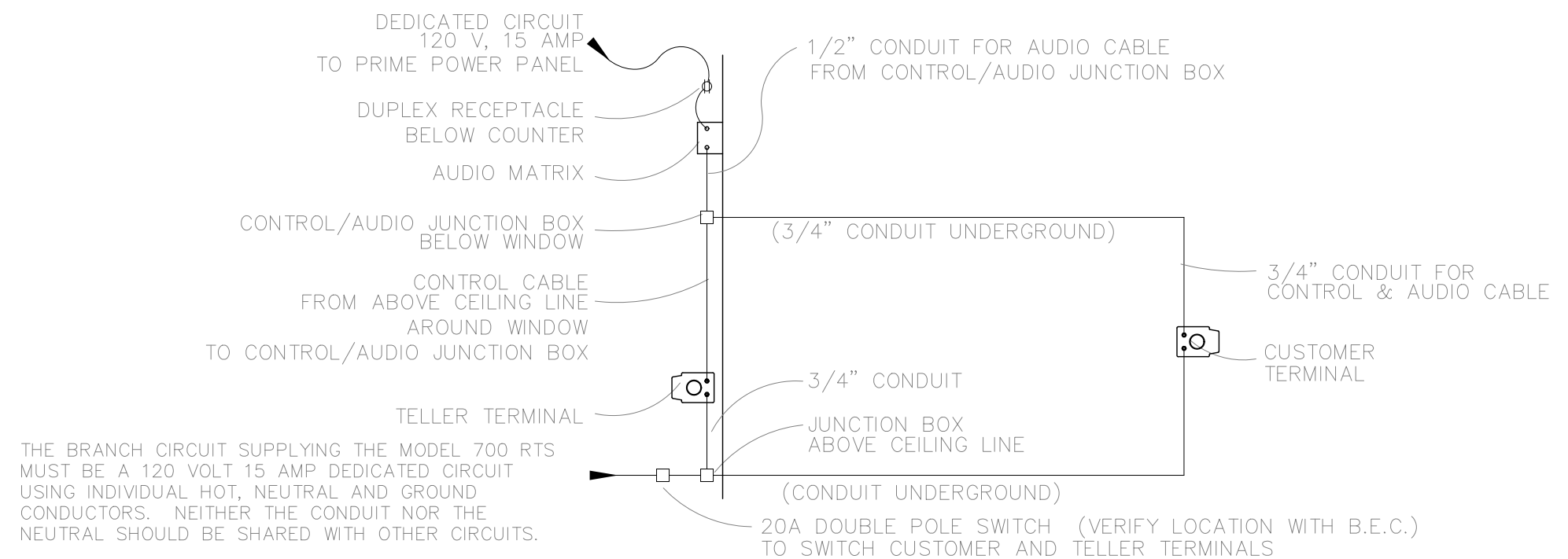

THE BRANCH CIRCUIT SUPPLYING THE MODEL 700 RTS MUST BE A 120 VOLT 15 AMP DEDICATED CIRCUIT USING INDIVIDUAL HOT, NEUTRAL AND GROUND CONDUCTORS. NEITHER THE CONDUIT NOR THE NEUTRAL SHOULD BE SHARED WITH OTHER CIRCUITS.

BLOCK DIAGRAM

(UNDERGROUND CONDUIT INSTALLATION)

DO NOT SCALE

GENERAL NOTES:

1. ALL CONDUIT & PROPER ROUTING OF SUCH IS BY OTHERS.
2. ALL RPOTECTIVE BOLLARDS BY OTHERS.
3. G.C. IS TO PROVIDE OPENINGS INTO BUILDING FOR ROUTING OF TUBES & SUCH. G.C. IS TO COVER OPENINGS AFTER INSTALLATION.
4. ELECTRICIAN IS TO PROPERLY LABEL ALL CIRCUITS.
5. CANOPY CONSTRUCTION IS TO BE SUCH THAT IT ALLOWS FOR A "STRAIGHT TUBE RUN" FROM TELLER TERMINAL TO CUSTOMER TERMINAL WITHOUT OBSTRUCTIONS.
6. TWO EACH OF 3/4x10' POWDER COATED IMC CONDUIT ARE PROVIDED WITH EACH UNIT.
7. IT IS THE RESPONSIBILITY OF OWNER/ARCHITECT/GC TO VERIFY ALL APPLICABLE NATIONAL,STATE & LOCAL CODES.

UL LISTED

American Vault® Waco, Texas

PRODUCT APPLICATION DRAWING

700 SERIES REMOTE TRANSACTION SYSTEM

MODEL 700-00 PVC MODEL 700-01 STEEL

SIZE	DWG NO	DATE	SHEET
B	20089	01.10.09	2 OF 2